WIRING SCHEMATICS

L27 NON-ROTISSERIE GRILL

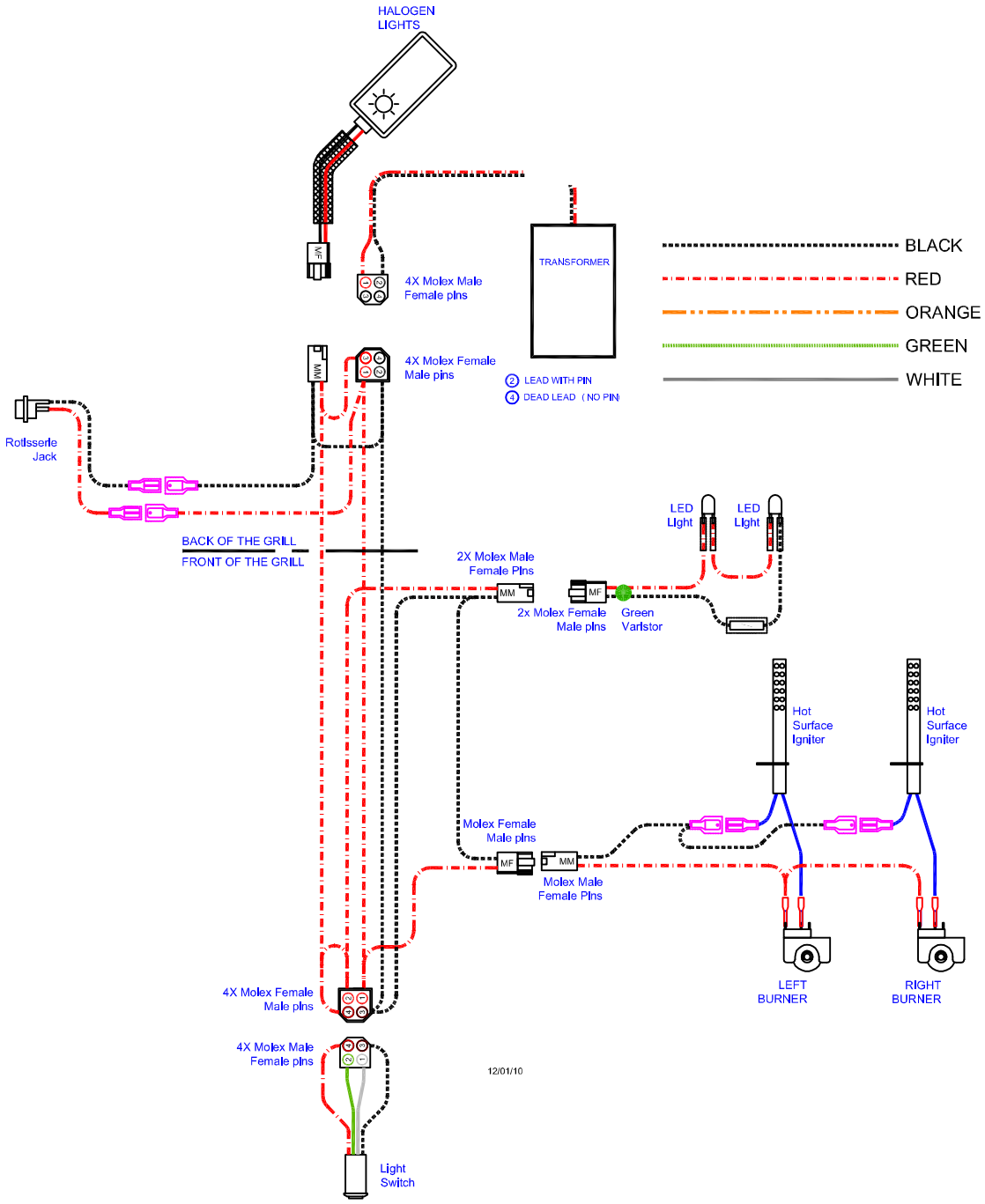

L27 & L30 ROTISSERIE GRILL

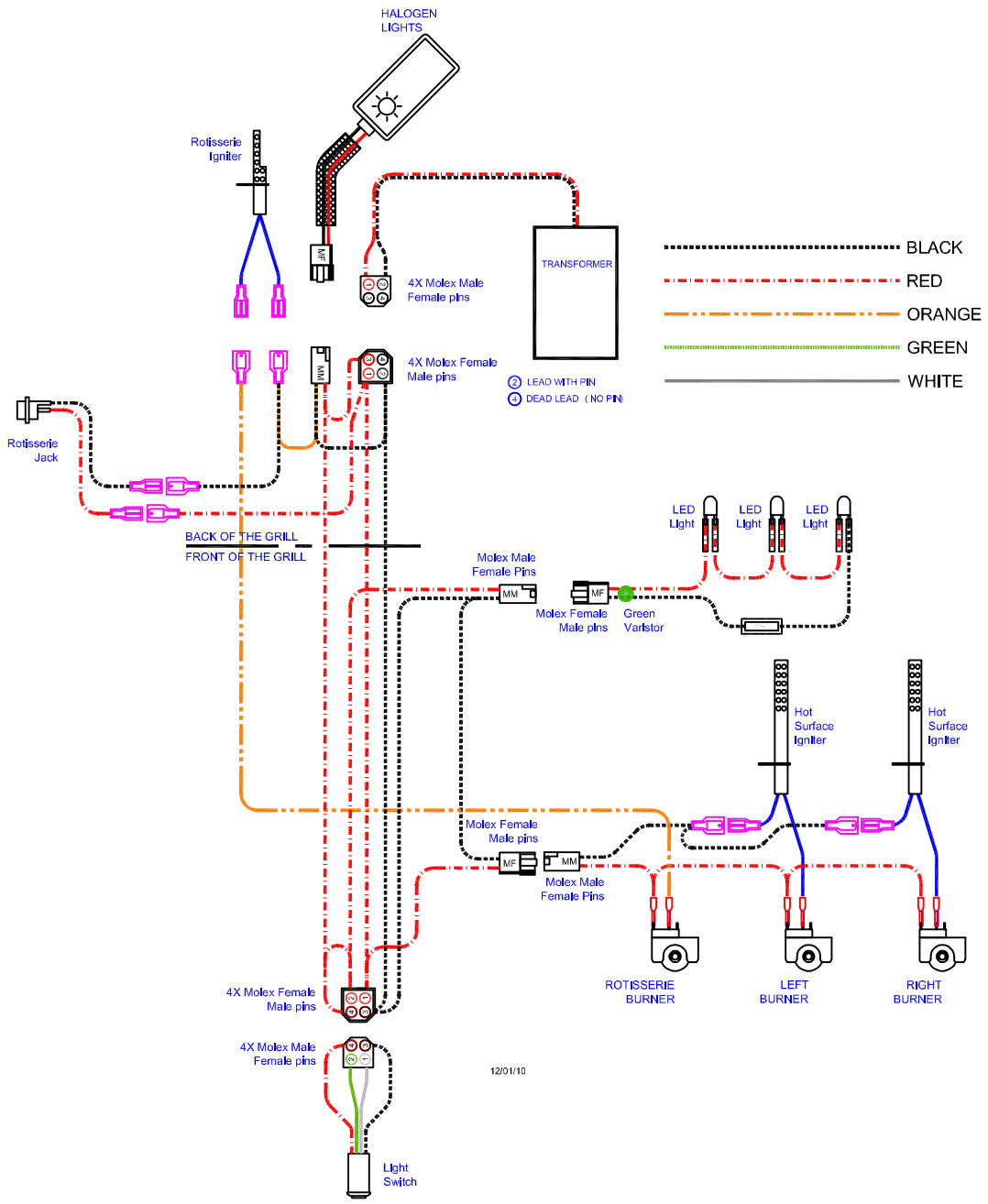

L36 & L42 ROTISSERIE GRILL

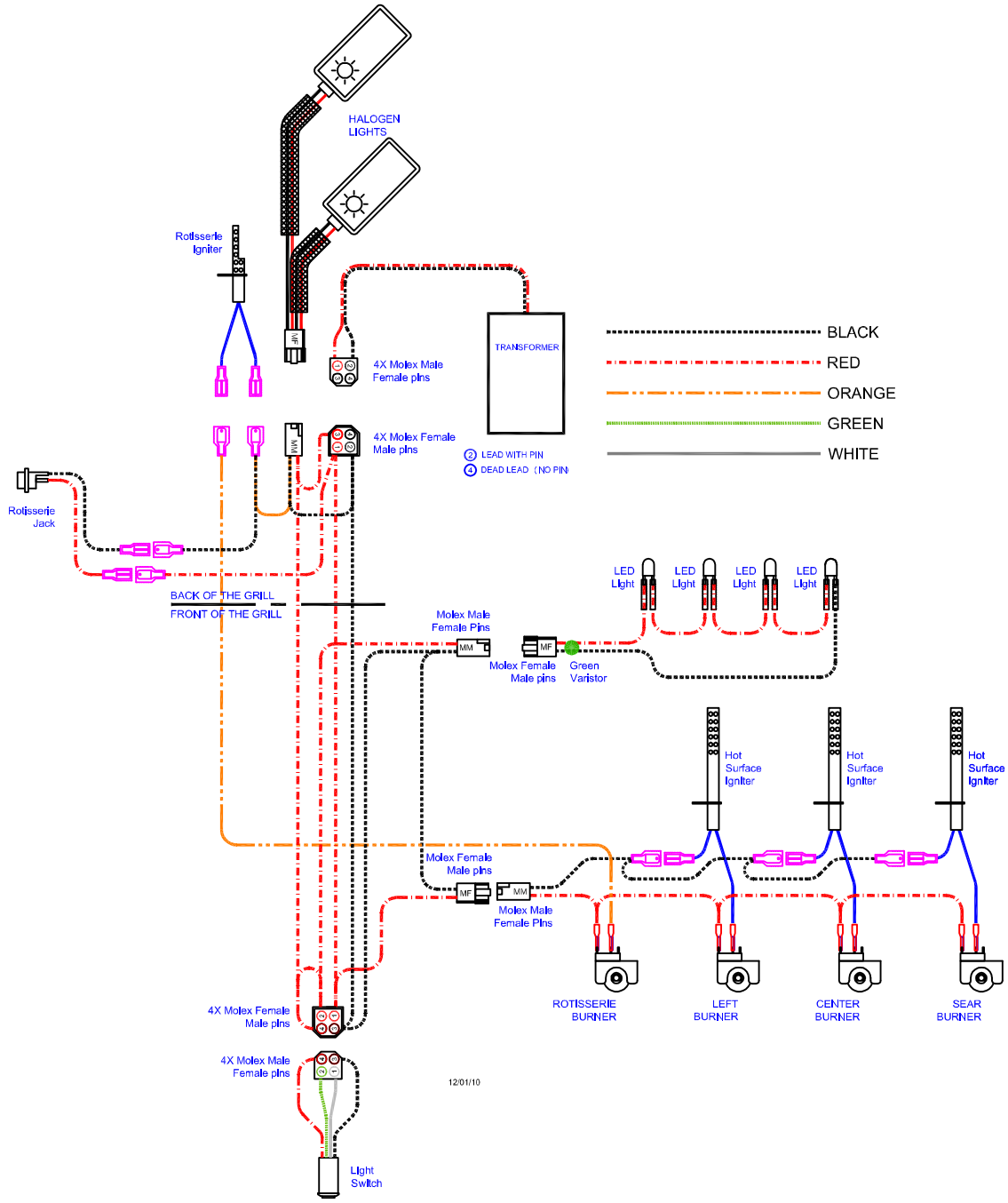

L54 ROTISSERIE GRILL

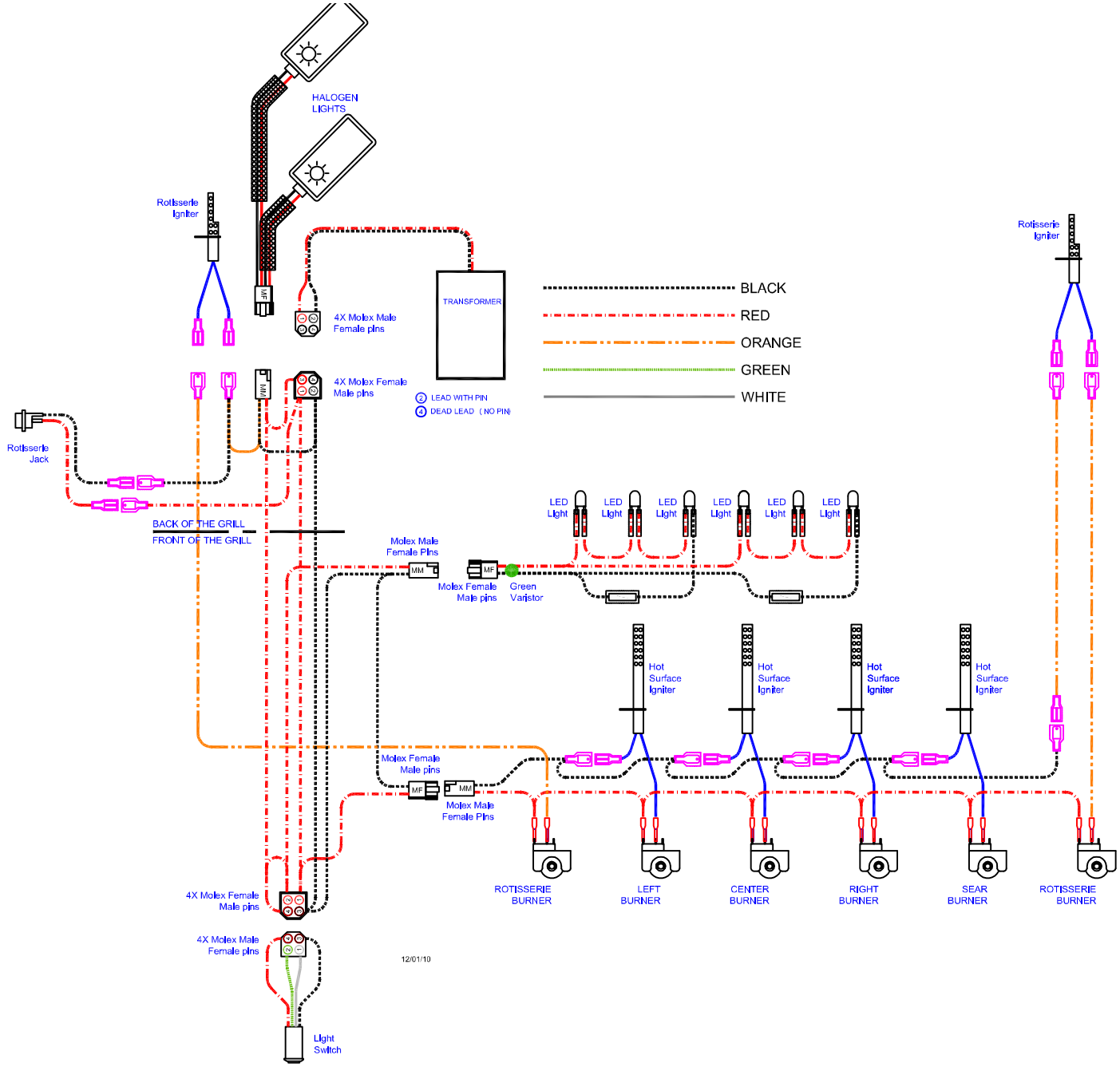

LYNX PROFESSIONAL GRILLS EXPLODED PARTS VIEW

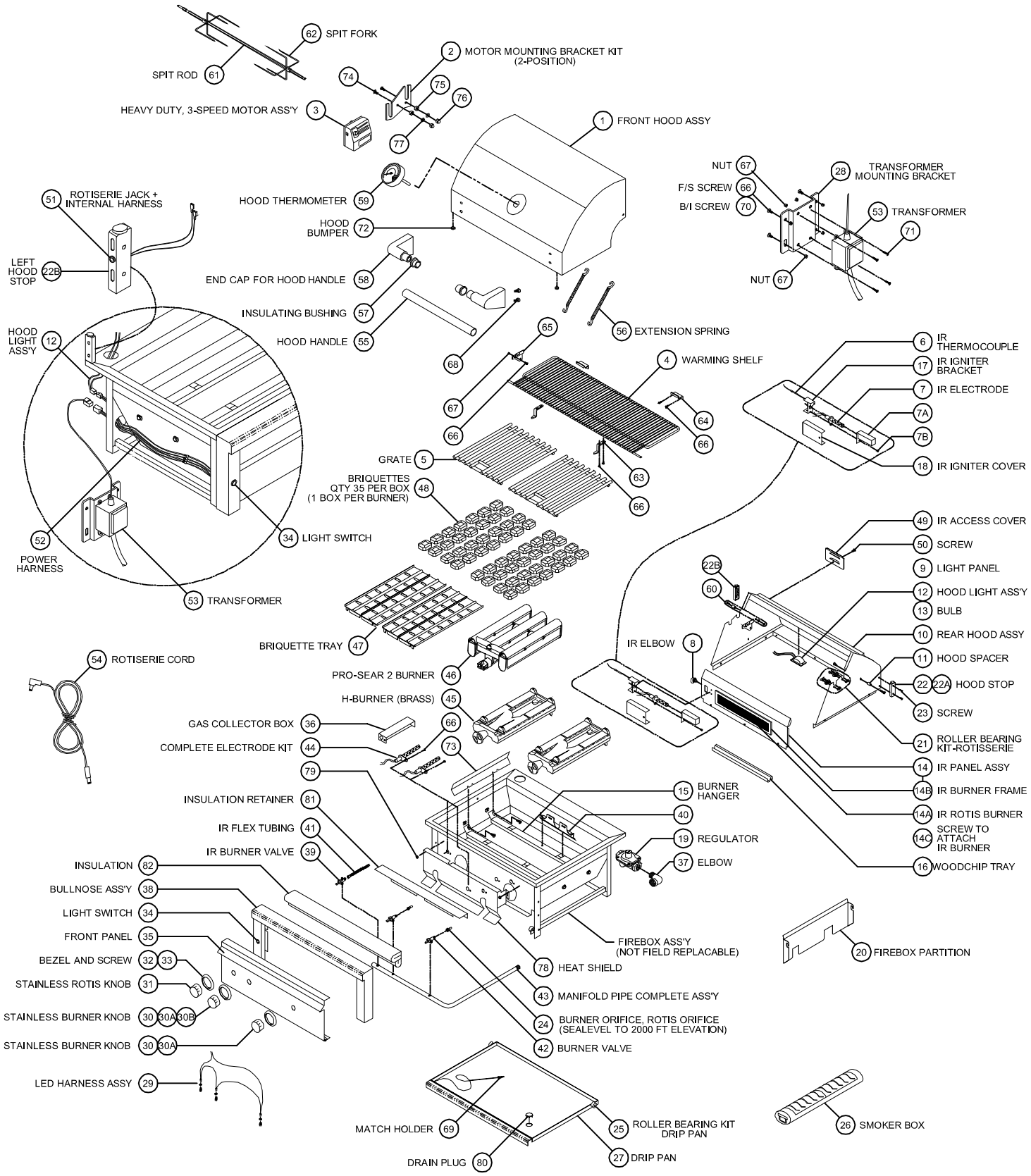

LYNX PROFESSIONAL GRILLS PARTS LIST

ITEM	GRILL SIZE	PART NO.	DESCRIPTION
1	L27	80322	FRONT HOOD ASSY, 27"
	L30	80309	FRONT HOOD ASSY, 30"
	L36	80310	FRONT HOOD ASSY, 36"
	L42	80311	FRONT HOOD ASSY, 42"
	L54	80312	FRONT HOOD ASSY, 54"
2	ALL	90132	MOTOR MOUNTING BRACKET KIT, ALL PRO
3	ALL	80277	MOTOR ASSY, HEAVY DUTY 3 SPEED
4	L27	32555	WARMING SHELF, PRO 27"
	L30	32109	WARMING SHELF, PRO 30"
	L36	32110	WARMING SHELF, PRO 36"
	L42	32111	WARMING SHELF, PRO 42"
	L54	32112	WARMING SHELF, PRO 54"
5	L27	17012	(2) GRATES- 12" x 18"
	L30	30018	(2) GRATES- 13 1/2" X 21"
	L36	17020	(2) GRATES- 16 1/2" X 18 1/2"
	L42	30018	(2) GRATES- 13 1/2" X 21"
	L42	30019	(1) GRATE- 12" X 21" (CENTER)
	L54	30018	(2) GRATES- 13 1/2" X 21"
	L54	30019	(2) GRATES- 12" X 21"
6	ALL	20018	IR THERMOCOUPLE
7	ALL	33052	IR ELECTRODE, HOT SURFACE (SEE ALSO #73)
7A	ALL	33093	GAS COLLECTOR BOX, IR ROTIS.
	L54	33102	GAS COLLECTOR BOX, IR ROTIS. R/H 54"
7B	ALL	14018	SCREW, #6-32 X 1/4 PH. PAN HD
8	ALL	31795	IR BRASS ELBOW, 7/16-20 MALE THREAD
9	L27	32551	LIGHT PANEL/REAR HOOD LINER, 27"
	L30	32156	LIGHT PANEL/REAR HOOD LINER, 30"
	L36	32441	LIGHT PANEL FOR DUAL LIGHTS, 36"
	L42	32442	LIGHT PANEL FOR DUAL LIGHTS, 42"
	L54	32159	LIGHT PANEL FOR DUAL LIGHTS, 54"
10	L27	80320	REAR HOOD ASSY, PRO 27"
	L27	80321	REAR HOOD ASSY, PRO 27" NON-IR
	L30	80269	REAR HOOD ASSY, PRO 30"
	L36	80270	REAR HOOD ASSY, PRO 36"
	L42	80271	REAR HOOD ASSY, PRO 42"
	L54	80272	REAR HOOD ASSY, PRO 54"
11	ALL	33812	HOOD SPACER, ALL PRO SERIES
12	27,30	80446	HOOD LIGHT ASS'Y, SINGLE W/10W BULB
	36,42,54	80447	HOOD LIGHT ASS'Y, DUAL W/10W BULB
13	ALL	31979	BULB, REPLACEMENT, 10W HALOGEN
	ALL	32322	GLASS REPLACEMENT COVER W/CLIP
14	L27	80318	IR PANEL ASSY, PRO 27" (INCLUDES BURNER)
	27 NON-IR	80319	REAR FINISHING PANEL, NON-IR, PRO 27"
	L30	80273	IR PANEL ASSY, 30" (INCLUDES BURNER)
	30 NON-IR	80599	REAR FINISHING PANEL, NON-IR, PRO 30"
	L36	80274	IR PANEL ASSY, 36" (INCLUDES BURNER)
	36 NON-IR	80601	REAR FINISHING PANEL, NON-IR, PRO 36"
	L42	80275	IR PANEL ASSY, 42" (INCLUDES BURNER)
	L54	80276	IR PANEL ASSY, 54" (INCLUDES BURNER)
14A	L27	32988	IR ROTIS. BURNER ONLY (SMALL-16 IN.)
	30,36,54	32989	IR ROTIS. BURNER ONLY (MEDIUM-21 IN.)
	L42	32990	IR ROTIS. BURNER ONLY (LARGE-28 IN.)
14B	L27	32991	IR BURNER FRAME ONLY (SMALL-16 IN.)
	30,36,54	32992	IR BURNER FRAME ONLY (MEDIUM-21 IN.)
	L42	32993	IR BURNER FRAME ONLY (LARGE-28 IN.)
14C	ALL	32644	SCREW, #8-32 X 5/16 PH. FLAT HD
15	L27	10067	BURNER HANGER, PRO 27"
	L30	32484	BURNER HANGER, PRO 30"
	L36	32245	BURNER HANGER, PRO 36"
	L42	32485	BURNER HANGER, PRO 42"
	L54	32486	BURNER HANGER, PRO 54"
16	27,30,54	10159	WOODCHIP TRAY (27",30",54")
	36,42	10158	WOODCHIP TRAY (36",42")
17	ALL	33059	IR IGNITER BRACKET, PRO
	L54	33060	IR IGNITER BRACKET, RIGHT, 54"
18	L30	33135	IR IGNITER COVER, PRO 30"
	27,36,42,54	33136	IR IGNITER COVER (27",36",42",54")
19	ALL NG	30781	REGULATOR 4/11 N/G ONLY
	ALL LP	13053	REGULATOR W/30" HOSE DOUBLE STAGE-LP
20	30,42,54	33662	FIREBOX PARTITION, PROSEAR 30",42",54"
	27/36	33663	FIREBOX PARTITION, PROSEAR 27"/36"
21	ALL	90128	ROLLER BEARING KIT-ROTISSERIE (2 PARTS EA)
22	ALL	32468	HOOD STOP, RIGHT, ALL PRO
22A	ALL	32470	BUMPER FOR HOOD STOP, .750 DIA
22B	ALL	33389	HOOD STOP, LEFT, ALL PRO
23	ALL	32469	SCREW/HOOD STOP-#8-32 X 1" PH TRUSS HD
24	L27,L36	PRENGK	COMPLETE ORIFICE FIELD KIT-LP TO NG
	L27,L36	PRELPK	COMPLETE ORIFICE FIELD KIT-NG TO LP
	30,42,54	PRONGK	COMPLETE ORIFICE FIELD KIT-LP TO NG
	30,42,54	PROLPK	COMPLETE ORIFICE FIELD KIT-NG TO LP
	L27,L36	13013	ORIFICE,BURNER, NG (#41 SHORT)
	L27,L36	13019	ORIFICE,BURNER, LP (#53 SHORT)
	30,42,54	30329	ORIFICE,BURNER, NG (#41 LONG)
	30,42,54	30328	ORIFICE,BURNER, LP (#53 LONG)
	PROSEAR	13015	ORIFICE,BURNER, NG (#44 SHORT)
	PROSEAR	13020	ORIFICE,BURNER, LP (#54 SHORT)
	30,36,54	13016	ORIFICE, IR ROTIS., NG (#50 SHORT)
	30,36,54	13021	ORIFICE, IR ROTIS., LP (#57 SHORT)
	L27"	13016	ORIFICE, IR ROTIS., NG (#50 SHORT)
	L27"	13021	ORIFICE, IR ROTIS., LP (#57 SHORT)
	L42"	30470	ORIFICE, IR ROTIS., NG (#48 SHORT)
	L42"	31342	ORIFICE, IR ROTIS., LP (#56 SHORT)
25	ALL	90129	ROLLER BEARING KIT-DRIP PAN (2 PARTS EA)
26	27,30,36,42,54	34586	SMOKER SET
27	L27	90223	DRIP PAN, PRO 27"
	L30	90224	DRIP PAN, PRO 30"
	L36	90225	DRIP PAN, PRO 36"
	L42	90226	DRIP PAN, PRO 42"
	L54	90227	DRIP PAN, PRO 54"
28	ALL	33130	TRANSFORMER MOUNTING BRKT B/I & F/S
29	27,30 NON-IR	80434	LED HARNESS ASSY, 27" NON-IR
	27,30	80435	LED HARNESS ASSY, 27"/30-IR
	30 NON-IR	80614	LED HARNESS ASSY, 30" NON-IR
	36,42	80436	LED HARNESS ASSY, 36"/42"
	36 NON-IR	80615	LED HARNESS ASSY, 36" NON-IR
	L54	80437	LED HARNESS ASSY, 54"
	ALL	32554	LED HOLDER
30	ALL	90137	KNOB, BURNER, STAINLESS
30A	ALL	90139	KNOB KIT, STAINLESS (3 BURNER +1 ROTIS)
30B	ALL	90231	KNOB, PRO SEAR BURNER
31	ALL	90136	KNOB, ROTIS, STAINLESS
32	ALL	10001	BEZEL
33	ALL	31929	BEZEL SCREW, #6-32 X 1/8 PH PAN
34	ALL	33148	LIGHT SWITCH + HARNESS, BLUE LIGHTED
35	L27	80536	FRONT PANEL, PRO 27"
	27 NON-IR	80537	FRONT PANEL, NON-IR, PRO 27"
	L30	80539	FRONT PANEL, 30"
	30 NON-IR	80596	FRONT PANEL, NON-IR, PRO 30"
	L36	80538	FRONT PANEL, PRO 36"
	36 NON-IR	80602	FRONT PANEL, NON-IR, PRO 36"
	L42	80540	FRONT PANEL, PRO 42"
	L54	80541	FRONT PANEL, PRO 54"

ITEM	GRILL SIZE	PART NO.	DESCRIPTION
36	ALL	33058	GAS COLLECTOR BOX, H-BURNER
37	ALL NG	13010	ELBOW, STREET, 1/2" 90 DEGREE-NG ONLY
	ALL LP	13054	ELBOW, 3/8" FLARE TO 1/2" FIP-LP ONLY
38	L27	80514	BULLNOSE ASS'Y, PRO 27"
	L30	80516	BULLNOSE ASS'Y, PRO 30"
	L36	80515	BULLNOSE ASS'Y, PRO 36"
	L42	80517	BULLNOSE ASS'Y, PRO 42"
	L54	80518	BULLNOSE ASS'Y, PRO 54"
39	ALL	31772	IR BURNER VALVE W/ MICROSWITCH
40	30,42,54 P/S	33405	BURNER SUPPORT, PROSEAR-2 30,42,54
	27,36 P/S	33809	BURNER SUPPORT, PROSEAR-2 27,36
41	ALL	31794	FLEX HOSE, 9 MM X 38" W/7/16 FITTINGS
42	ALL	33339	MAIN BURNER VALVE W/ MICROSWITCH
	ALL	32845	MICROSWITCH REPLACEMENT FOR VALVE
43	L27	80251	MANIFOLD ASS'Y W/VALVES, 27" LP
	L27	80252	MANIFOLD ASS'Y W/VALVES, 27" LP NON IR
	L27	80253	MANIFOLD ASS'Y W/VALVES, 27" NG
	L27	80254	MANIFOLD ASS'Y W/VALVES, 27" NG NON IR
	L27	80429	MANIFOLD ASS'Y W/VALVES, 27" LP PROSEAR
	L27	80428	MANIFOLD ASS'Y W/VALVES, 27" NG PROSEAR
	L30	80212	MANIFOLD ASS'Y W/VALVES, 30" LP
	L30	80598	MANIFOLD ASS'Y W/VALVES, 30" LP NON-IR
	L30	80214	MANIFOLD ASS'Y W/VALVES, 30" NG
	L30	80597	MANIFOLD ASS'Y W/VALVES, 30" NG NON IR
	L30	80211	MANIFOLD ASS'Y W/VALVES, 30" LP PROSEAR
	L30	80213	MANIFOLD ASS'Y W/VALVES, 30" NG PROSEAR
	L36	80227	MANIFOLD ASS'Y W/VALVES, 36" LP PROSEAR
	L36	80228	MANIFOLD ASS'Y W/VALVES, 36" LP
	L36	80229	MANIFOLD ASS'Y W/VALVES, 36" NG PROSEAR
	L36	80230	MANIFOLD ASS'Y W/VALVES, 36" NG
	L42	80201	MANIFOLD ASS'Y W/VALVES, 42" LP PROSEAR
	L42	80202	MANIFOLD ASS'Y W/VALVES, 42" LP
	L42	80203	MANIFOLD ASS'Y W/VALVES, 42" NG PROSEAR
	L42	80204	MANIFOLD ASS'Y W/VALVES, 42" NG
	L54	80220	MANIFOLD ASS'Y W/VALVES, 54" LP PROSEAR
	L54	80221	MANIFOLD ASS'Y W/VALVES, 54" NG PROSEAR
44	27,30 NON-IR	90184	COMPLETE ELECTRODE KIT, 27"/30" NON-IR
	27,30	90185	COMPLETE ELECTRODE KIT, 27"/30" IR
	36 NON-IR	90186	COMPLETE ELECTRODE KIT, 36" NON-IR
	36,42	90187	COMPLETE ELECTRODE KIT, 36"/42"
	L54	90188	COMPLETE ELECTRODE KIT, 54"
45	30,42,54	30485	H-BURNER (BRASS)
	27,36	11012	H-BURNER (BRASS)
46	PS MODELS	33415	PROSEAR-2 BURNER, 30", 42", 54"
	30,42,54	90181	SCREEN REPLACEMENT, PROSEAR 2 BURNER
	PS MODELS	33478	PROSEAR-2 BURNER, SHORT, 27"/36"
	27,36	90179	SCREEN REPLACEMENT, PROSEAR 2 BURNER, 27/36
47	30,42,54	80645	BRIQUETTE TRAY, WIDE, 30",42",54"
	30,42,54	90191	COMPLETE TRAY W/ BRIQUETTES & CLIPS
	42,54	80644	BRIQUETTE TRAY, NARROW, 42",54"
	42,54	90190	COMPLETE TRAY W/ BRIQUETTES & CLIPS
	27,36	80643	BRIQUETTE TRAY, 27", 36"
	27,36	90189	COMPLETE TRAY W/ BRIQUETTES & CLIPS
48	ALL	90053	BRIQUETTES, 35 PER BOX
49	ALL	30417	IR ACCESS COVER
50	ALL	14012	SCREW, 1/4-20 X 3/8 PH TRUSS HD, S/S
51	ALL	80440	ROTISERIE JACK + INTERNAL HARNESS
	ALL	33129	JACK ONLY, DC PANEL MOUNT
52	ALL	80533	MAIN POWER HARNESS (27IR, 30, 36, 42, 54)
	27,30 NON-IR	80534	MAIN POWER HARNESS, 27"/30" NON-IR
53	ALL	33100	TRANSFORMER, 5 AMP, ALL PRO
54	ALL	33416	ROTISERIE EXTERNAL CORD
55	L27	32557	HOOD HANDLE, 27"
	L30	32522	HOOD HANDLE, 30"
	L36	32523	HOOD HANDLE, 36"
	L42	32524	HOOD HANDLE, 42"
	L54	32525	HOOD HANDLE, 54"
56	30,42,54	31874	EXTENSION SPRING, 30", 42", 54"
	27,36	31780	EXTENSION SPRING, 27", 36"
57	ALL	31738	INSULATING BUSHING, HOOD HANDLE
58	ALL	31736	END CAP FOR HOOD HANDLE
59	ALL	33558	HOOD THERMOMETER, SEALED
	ALL	33573	WASHER FOR HOOD THERMOMETER
60	ALL	14013	PIVOT SCREW, 1/4-20 X 1" HEX DRIVE
	ALL	14009	PIVOT SCREW NUT, HEX, 1/4-20 S/S
	ALL	14026	PIVOT WASHER, SPLIT LOCK, 1/4 S/S
61	L27	32556	SPIT ROD, PRO 27"
	L30	32128	SPIT ROD, PRO 30"
	L36	32129	SPIT ROD, PRO 36"
	L42	32130	SPIT ROD, PRO 42"
	L54	32131	SPIT ROD, PRO 54"
62	ALL	31563	SPIT FORK, HEAVY DUTY, ALL SIZES
63	ALL	33033	FRONT RETAINING BKT., WARMING RACK
64	ALL	32133	REAR RETAINING BRACKET, WARMING RACK
65	ALL	33597	LEFT RETAINING BRACKET, WARMING RACK
66	ALL	14014	SCREW #8-32 x 3/8 PH TRUSS HEAD S/S
67	ALL	14024	LOCK NUT, #8-32, S/S
68	ALL	31930	BOLT, HEX HEAD, 1/4-20 X 3/8", S/S
69	ALL	31031	ALTERNATE LIGHTING DEVICE, MATCH HOLDER
70	ALL	31013	SCREW, #8 X 1/2 PH TRUSS HD TYPE 'A'
71	ALL	31649	SCREW, #8-32 X 5/8 PH. PAN HD, S/S
72	ALL	32477	HOOD BUMPER, .500 DIA
73	30,42,54	33609	BRIQUETTE DIVIDER 30",42",54"
	27,36	33751	BRIQUETTE DIVIDER 27",36"
74	ALL	14099	SCREW, #10-24 X 3/4 PH FLAT HD S/S
75	ALL	32939	ROTIS. SPACER
76	ALL	32196	NUT, ACORN, #10-24, S/S
77	ALL	32197	WASHER, #10 SPLIT LOCK, S/S
78	L27	33657	HEAT SHIELD, PRO 27"
	L27	33652	HEAT SHIELD, PROSEAR 27"
	L30	33659	HEAT SHIELD, PRO 30"
	L30	33654	HEAT SHIELD, PROSEAR 30"
	L36	33658	HEAT SHIELD, PRO 36"
	L36	33653	HEAT SHIELD, PROSEAR 36"
	L42	33660	HEAT SHIELD, PRO 42"
	L42	33655	HEAT SHIELD, PROSEAR 42"
	L54	33656	HEAT SHIELD, PROSEAR 54"
79	ALL	14023	NUT, COMBINATION (FOR HEAT SHIELD)
80	ALL	32839	DRAIN PLUG, DRIP PAN
81	L27	34677	RETAINER, INSULATION
	L30	34676	RETAINER, INSULATION
	L36	34630	RETAINER, INSULATION
	L42	34629	RETAINER, INSULATION
	L54	34675	RETAINER, INSULATION
82	L27	20021	INSULATION 2 PCS (27" X 6")
	L30	20021	INSULATION 2 PCS (30" X 6")
	L36	20021	INSULATION 2 PCS (36" X 6")
	L42	20021	INSULATION 2 PCS (42" X 6")
	L54	20021	INSULATION 2 PCS (54" X 6")

MODEL-SPECIFIC BTU OUTPUTS & MAX. RUNS FOR APPLIANCES

MODEL-SPECIFIC BTU OUTPUTS				
MODEL	H BURNER (Btu)	ROTISSERIE (Btu)	PROSEAR™ 2 (Btu)	TOTAL INPUT
L27(F)	2 @ 25,000			50,000 Btu/Hr
L27(F)R	2 @ 25,000	1 @ 14,000		64,000 Btu/Hr
L27PS(F)R	1 @ 25,000	1 @ 14,000	1 @ 23,000	62,000 Btu/Hr
L30R(F)	2 @ 25,000	1 @ 14,000		64,000 Btu/Hr
L30PS(F)R	1 @ 25,000	1 @ 14,000	1 @ 23,000	62,000 Btu/Hr
L36R	3 @ 25,000	1 @ 14,000		89,000 Btu/Hr
L36PS(F)R	2 @ 25,000	1 @ 14,000	1 @ 23,000	87,000 Btu/Hr
L42R	3 @ 25,000	1 @ 16,000		91,000 Btu/Hr
L42PS(F)R	2 @ 25,000	1 @ 16,000	1 @ 23,000	89,000 Btu/Hr
L54PS(F)R	3 @ 25,000	2 @ 14,000	1 @ 23,000	126,000 Btu/Hr

MAXIMUM RUNS FOR ALL APPLIANCES ON SUPPLY LINE	
Run Length 3/4" Pipe (in feet)	Max BTU for all Appliances on line
10	360,000
20	245,000
30	198,000
40	169,000
50	150,000
60	135,000
70	123,000
80	115,000

NOTE: IF A 1/2 INCH LINE IS USED WITH NATURAL GAS IT SHOULD BE NO LONGER THAN 12 FEET.