PARTS AND COMPONENTS

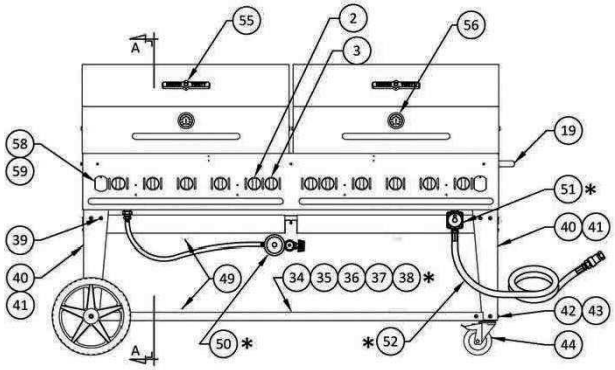

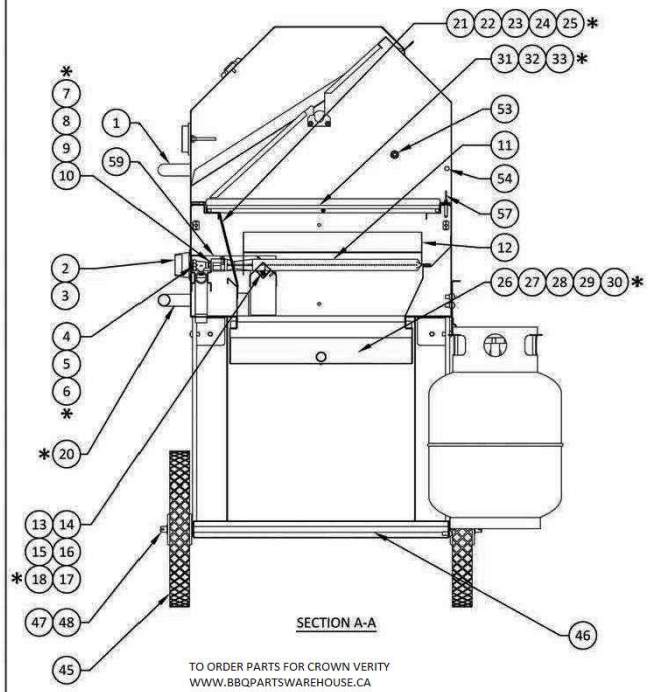

TO ORDER PARTS FOR CROWN VERITY
WWW.BBQPARTSWAREHOUSE.CA

* NOTES:

1) PLEASE SPECIFY MODEL NUMBER, TYPE OF GAS AND SERIAL NUMBER WHEN ORDERING REPLACEMENT PARTS EXAMPLE: MCB-48, PROPANE, #####

2) NEW STYLE FRONT LIGHTING STARTED AT S/N 20087

DUE TO A CONTINUOUS PROGRAM OF PRODUCT IMPROVEMENT CROWN VERITY INC. RESERVES THE RIGHT TO MAKE CHANGES IN DESIGN AND IN SPECIFICATIONS WITHOUT NOTICE

THIS DRAWING IS THE PROPERTY OF CROWN VERITY INC. AND IT IS NOT TO BE REPRODUCED WITHOUT EXPRESSED WRITTEN CONSENT OF CROWN VERITY INC.

ITEM	PART No.	DESCRIPTION
1	2005 2105	ROLL DOME HANDLE - 12" ROLL DOME HANDLE - 18"
2	2080	BURNER KNOB
3	2090	PILOT KNOB
4	2030	CONTROL VALVE - PROPANE
5	2050	CONTROL VALVE - NATURAL GAS
6	2040	CONTROL VALVE - PILOT
7	2032	BURNER ORIFICE - PROPANE
8	2052	BURNER ORIFICE - NATURAL GAS
9	2042	PILOT ORIFICE - PROPANE
10	2044	PILOT ORIFICE - NATURAL GAS
11	2060	BURNER
12	2070	RADIANT
13	ZCV-3032-BI	LIGHTER TUBE - 36"&LH 72" MCB
14	ZCV-4032-BI	LIGHTER TUBE - LH 48" MCB
15	ZCV-4033-BI	LIGHTER TUBE - RH 48" MCB
16	ZCV-8032-BI	LIGHTER TUBE - 30"&LH 60" MCB
17	ZCV-6033-BI	LIGHTER TUBE - RH 60" MCB
18	ZCV-7033-BI	LIGHTER TUBE - RH 72" MCB
19	2105	PUSH HANDLE - 18"
20	2208 2209 2210	27" BUMPER (30&60 MCB) 33" BUMPER (36&72 MCB) 45" BUMPER (48 MCB)
21	3023	HEAT SHIELD - 36"&LH 72" MCB
22	4023	HEAT SHIELD - 48" MCB
23	6023	HEAT SHIELD - 30"&LH 60" MCB
24	6024	HEAT SHIELD - RH 60" MCB
25	7024	HEAT SHIELD - RH 72" MCB
26	8025	GREASE TRAY - 30" MCB
27	3025	GREASE TRAY - 36" MCB
28	4025	GREASE TRAY - 48" MCB
29	6025	GREASE TRAY - 60" MCB
30	7025	GREASE TRAY - 72" MCB
31	2170	COOKING GRATE - 12" X 20 1/2"
32	2160	COOKING GRATE - 14" X 20 1/2"
33	2150	COOKING GRATE - 22" X 20 1/2"
34	8071	UNDER SHELF - 30" MCB
35	3071	UNDER SHELF - 36" MCB
36	4071	UNDER SHELF - 48" MCB
37	6071	UNDER SHELF - 60" MCB
38	7071	UNDER SHELF - 72" MCB
39	2142	LEG BOLT
40	2213	LEG - RIGHT HAND
41	2212	LEG - LEFT HAND
42	2211	CASTER MOUNT
43	2220	CASTER MOUNT STIFFENER
44	2216	CASTER - 5"
45	2141	SPOKE WHEEL - 14" PLASTIC SPOKE
46	2215	AXLE
47	2146	AXLE WASHER
48	2148	AXLE PIN
49	2214	CYLINDER BRACKET ASSEMBLY
50	2200	HOSE&REGULATOR ASS'Y - PROPANE
51	2180 2189	1/2" REGULATOR - NAT. GAS (30, 36&48 MCB) 3/4" REGULATOR - NAT. GAS (60&72 MCB)
52	5110 5120	1/2" N.G. HOSE C/W Q/D (30, 36&48 MCB) 3/4" N.G. HOSE C/W Q/D (60&72 MCB)
53	2205	ROLL DOME PIVOT ASSEMBLY
54	2206	ROLL DOME STOP ASSEMBLY
55	2003	BRONZE NAME PLATE ASSEMBLY
56	2004	THERMOMETER ASSEMBLY
57	2020	ROLL DOME PIN/RING ASSEMBLY
58	ZCV-2303	WING DOOR
59	ZCV-2302	PILOT SHIELD/COVER